ISM515-2D-2C

5-Port Layer 2 100M Managed Embedded Switch Module with 4 Data Ports



- Support 5 100M Ethernet ports, 2 TTL UART and 2 TTL CAN ports, providing flexible networking options
- Support serial/CAN terminal equipment networking and realize transparent transmission between serial/CAN bus and Ethernet (UDP/TCP)
- Support ring network redundancy protocols such as MW-Ringv1/v2, ERPS, STP/RSTP, to improve network reliability
- Fast ring redundancy with less than 20ms (MW-Ringv1/v2) improves system communication reliability
- Compact structure and small size, convenient for installation, maintenance and PCBA
- Support DC 3.3V power input
- Support device to operate reliably in harsh industrial environments ranging from -40°C to +85°C

Product Description

ISM515-2D-2C is a Layer 2 100M managed embedded switch module. It supports 5 100M Ethernet ports with fiber port or copper port optional, and also provides 2 TTL UART and 2 TTL CAN interfaces to expand RS232/485 serial port and CAN bus port.The switch adopts a store-and-forward mechanism and has powerful bandwidth processing capabilities to automatically troubleshoot data packet errors, reduce transmission failures, and ensure stable, reliable, and efficient data transmission. The hardware adopts low power consumption, wide temperature, modular design, compact structure and small size. It is easy to install and maintain, and the board can be flexibly made to customize the interface connection method; selected industrial-grade components, -40℃~+ 85℃ wide temperature operation, embedded installation method, can adapt to various harsh working environments, and the communication performance is stable.

ISM515-2D-2C supports a range of features and network protocols, such as MW-Ringv1/v2, STP/RSTP, VLAN, QoS, port mirroring, static multicast MAC address binding, network diagnosis, alarm and system online upgrade, etc., which can improve the performance, reliability and security of the network and meet the needs of requirements of various complex networks. It supports various network transmission modes such as UDP, TCP Client, TCP Server, UDP multicast, etc., to realize networking of serial/CAN terminal devices. This product meets the requirements of complex networks and harsh industrial environments through strict testing of functions, high and low temperatures, safety regulations and EMC. It can be widely used in fields such as comprehensive energy, smart cities, rail transit, intelligent transportation, smart factories, and industrial automation.

Product Features

- Support broadcast, multicast and unknown unicast packet export and inlet rate limits
- Support unknown unicast, unknown multicast, known multicast and broadcast packet rate limiting to suppress network storms
- Support QoS quality of service, allowing voice, video and important data to be transmitted preferentially in network equipment to solve network congestion
- Support 802.1Q VLAN and provides Access, Trunk, and Hybrid interfaces to easily divide multiple broadcast domains and enhance network security.
- Support static multicast MAC address binding, reducing the broadcast of multicast data in the network and saving network resources.
- Support RSTP (Rapid Spanning Tree Protocol) compatible with STP (Spanning Tree Protocol) to eliminate network loops and enhance network reliability
- The serial/CAN support UDP or UDP multicast mode. Point-to-point, point-to-multi point or multi point-to-multi point communication can be achieved through the UDP protocol, which is fast and efficient.
- The serial/CAN support TCP Client/Server mode, establishing connections through the TCP protocol, providing reliable data transmission. TCP Client can establish 1 connection, and TCP Server can establish up to 4 connections.
- Support multiple sub-packaging mechanisms to convert serial port/CAN data into Ethernet data packets to meet the real-time needs of different networks
- The CAN supports normal mode, loopback mode and listening mode, which can be used for normal communication, bus testing and troubleshooting respectively.
- Support CAN ID filtering, allowing transmission of standard frames or extended frames within a specified ID range
- Support port statistics, counts different types of data frames sent and received, and monitors port traffic.
- Support visitors and administrators, and hierarchical management of users with different permissions
- Support device online restart, factory reset and system upgrade

Specification

Software	
Switching	Support port configuration, port rate limiting, storm detection, port aggregation, and port statistic Support 802.1Q VLAN and port VLAN Support MAC address aging
CAN/Serial Port	Support UDP, TCP Client, TCP Server, UDP multicast and other network working modes Support statistic on the number of bytes sent and received by serial port and network Support CAN working modes such as normal mode, monitoring mode, loopback mode, etc. Support CAN ID filtering, CAN frame statistic
Redundancy	Support MW-Ringv1/v2 proprietary ring network technology Support RSTP (Rapid Spanning Tree Protocol) and is compatible with STP (Spanning Tree Protocol)
Multicast	Support static multicast MAC address binding
Management and Maintenance	Support static IP Support QoS quality of service, 802.1P/DSCP/port priority mapping, absolute and relative priority control Support port mirroring, ping, alarm Support user management with different permissions, online restart, factory reset, system upgrade, and configuration file upload/download Support MixView, MaxView management
Switch Capability	
Processing Type	Store and Forward
Backplane Bandwidth	1Gbps
Buffer Size	64KB
MAC Table Size	2K
Interface	
100M Ethernet Port	5*100M Ethernet interface, expandable to 10/100Base-T(X) copper port or 100Base-FX fiber port

Specification

TTL UART	Number of interfaces: 2 Interface type: 3.3V TTL UART, can be connected to an external serial port chip to expand the RS232/485 serial port Baud rate: 600bps-115200bps Data bits: 7bit, 8bit Stop bit: 1bit, 2bit Check digit: no check, odd check,even check, Space, Mark
TTL CAN	Quantity: 2 CAN bus ports Type: 3.3V TTL CAN port, can be connected to an external CAN transceiver chip to expand the CAN bus port Baud rate: 5kbps-1000kbps
Alarm Interface	2*alarm output and 2*alarm input
CONSOLE	1 TTL UART for device debugging
Power Supply	
Input Voltage	DC 3.3V
Power Consumption	＜1W@DC3.3V
Physical Characteristics	
Dimensions	55×40×9.9(mm)
Installations	Embedded installation
Weight	About 30g
Working Environment	
Operating Temp	-40℃~+85℃
Storage Temp	-40℃~+85℃
Relative Humidity	5%~95% (non-condensing)

Dimensions

Unit: mm

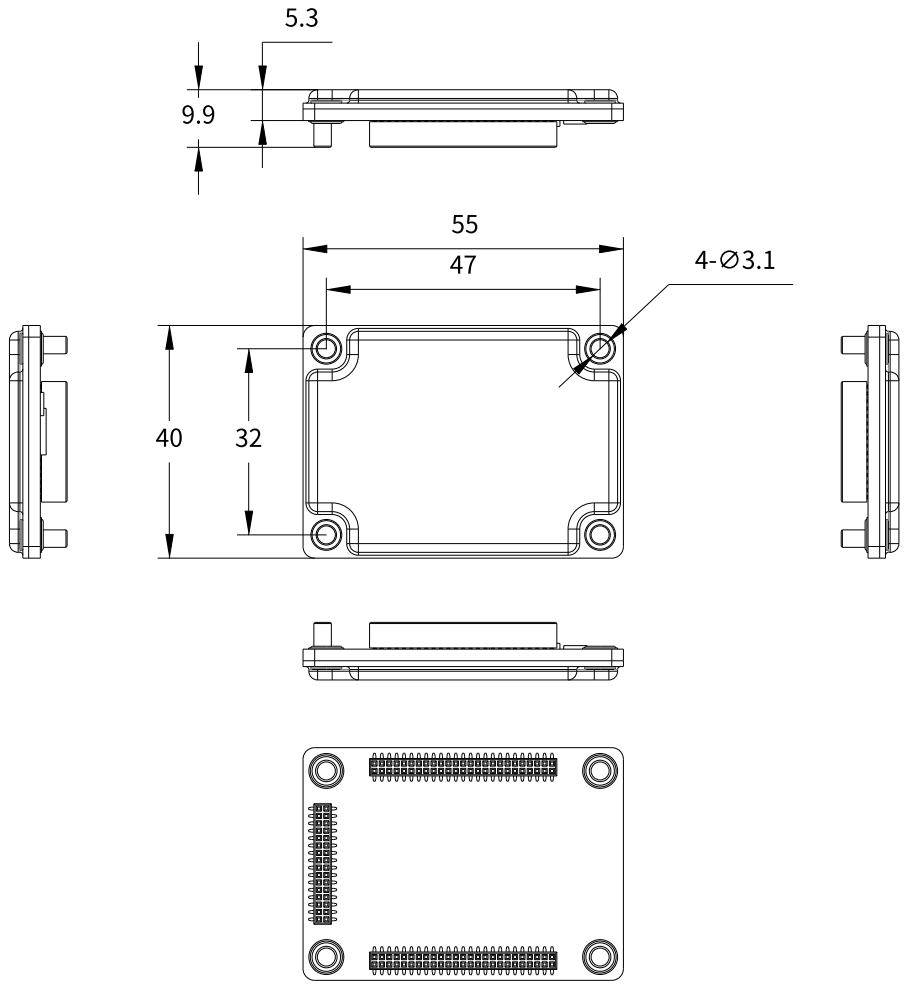

Ordering Information

Standard Model	100M Ethernet Port	UART	CAN	Input Voltage
ISM515-2D-2C	5	2	2	DC 3.3V

Contact Us

COME-STAR COMMUNICATION(WUHAN) CO., LTD.

Address:Bldg. 4, East Area, Wuhan Innovative Center, No.27 Yangqiaohu Ave., Jiangxia Dist.,
Wuhan 430205, Hubei, ChinaTel: +86-027-59951128
Mail: info@come-star.com
Official site: www.come-star.com

Copyright © Come-Star All rights reserved